CMS1500

Gas Mass Flowmeter (Aluminum)

The CMS1500 is a highly reliable gas mass flowmeter that uses the Yamatake µF (Micro Flow) sensor as its sensing element. The µF sensor is a MEMS thermal mass-flow sensor capable of measuring ultra-low flow rates. The integration of the µF sensor and advanced channel design technology has achieved high accuracy and high rangeability at a low cost.

Specifications

Compatible gases	Air, nitrogen, argon, carbon dioxide (CO_2). Gas must be dry and without corrosive components (chlorine, sulfur, acid, etc.). It must also be clean, without dust or oil mist.
Flow rate range	0 to 1500L/min (standard) "Standard" refers to the flow rate adjusted for 20°C, 101.325kPa (1 atmosphere).
Measurement accuracy	1/10 to 1/1 of flow rate range: ±5% rdg. 1/50 to 1/10 of flow rate range: ±1% FS % rdg.: percentage of indicated reading. % FS: percentage of full scale.
Operating pressure	0 to 0.6MPa
Sampling cycle	100ms ±10%
Power	12 to 24Vdc
Current consumption	100mA max.
Mass	Approx. 3000g

● Gas Type and Maximum Control Flow Rate

The maximum control flow rate varies according to the gas type.

Gas type	Flow rate (L/min (standard))
Air/nitrogen	1500
Argon	1500
Carbon dioxide (CO_2)	900

Selection Guide

I II III IV V VI VII VIII IX X XI XII Example: **CMS1500BARN210000**

Segment	Model No. selection		Description
I	Basic No.	**CMS**	Gas mass flowmeter
II	Flow rate range	**1500**	0 to 1500L/min (standard)
III	Type	**B**	Integrated display
IV	Material	**A**	Aluminium
V	Connection size	**R**	Rc 1"
VI	Gas type	**N**	Air, nitrogen, argon and CO_2
VII	Output	**2**	4 to 20mA, 0 to 5V or 1 to 5V (selectable)
VIII	Option 1	**1**	RS-485 communications
IX	Option 2	**0**	None
X	Option 3	**0**	None
XI	Option 4	**0**	None
		D	With inspection data
		Y	With traceability certification
XII	Design code	**0**	Product version

Accessories (sold separately)

Model No.	Description
81446594-007	Harness for RS-485 communications (2m long)
81446594-008	Harness for RS-485 communications (5m long)

Dimensions
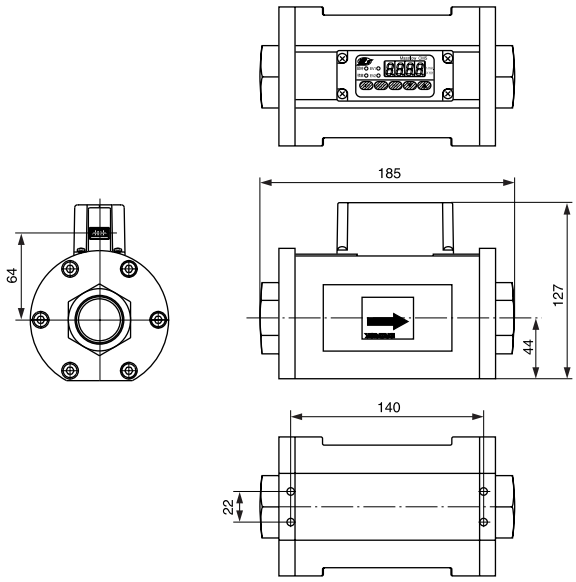
(Unit: mm)